ASI294 Manual

Revision 1.6

Jan, 2021

Table of Contents

1. Instruction

Congratulations and thank you for buying one of our ASI Cameras！ This manual will give you a brief introduction to your ASI camera. Please take the time to read it thoroughly and if you have any other questions, please feel free to contact us at info@zwoptical.com.

Welcome to join ZWO FB and User Forum below!
Facebook : https://www.facebook.com/ZwoDesignAstronomyCameras
User Forum: https://bbs.astronomy-imaging-camera.com/

ASI294 Camera is specifically designed for astronomical photography. It is not only suitable for DSO imaging but also for Planetary imaging. You will be impressed by its superior performance and wide use!

Models	Mono or Color	Regulated TEC Cooling	Sensor
ASI294MC	Color	No	SONY IMX294 CMOS
ASI294MM	Mono	No	SONY IMX294 CMOS
ASI294MC Pro	Color	Yes	SONY IMX294 CMOS
ASI294MM Pro	Mono	Yes	SONY IMX492 CMOS

Which camera to choose?

Normally, mono camera sensors are with higher sensitivity, better at high-demand shooting tasks. But extra accessories will be needed, such as filter wheel and filters, etc. Post processing of image is also complicated, thus we recommend the color cameras to fresh users.

TEC cooling will help to reduce dark current noise for long exposures. For short exposures, such as under one second, the dark current noise is very low. So cameras without TEC cooling are normally recommend for planetary imaging. For DSO imaging, we recommend you use cooled camera since long exposures are required.

For software installation instructions and other technical information, please refer to our official website https://astronomy-imaging-camera.com/

2. What's in the box?

ASI294MM/MC

ASI294MM/MC Pro

3. Camera technical specifications

Sensor	SONY IMX294 CMOS SONY IMX492 CMOS（ASI294MM Pro）
Diagonal	23.2mm
Resolution	11.7 Mega Pixels 4144*2822
Pixel Size	4.63μm
Image area	19.2mm*13mm
Max FPS at full resolution	19FPS
Shutter	Rolling shutter
Exposure Range	32μs-2000s
Read Noise	1.2-7.3e (OSC) 1.2-8e (mono)
QE peak	About 75% (OSC) About 90% (mono)
Full well	63.7k e (color) 66.4k e (mono)
ADC	14 bit
DDR3 buffer	256MB
Interface	USB3.0/USB2.0
Adapters	M42*0.75
Protect window	AR window
Dimensions	62mm Diameter (uncooled) 78mm Diameter (cooled)
Weight	140g (uncooled) 410g (cooled)
Back Focus Distance	6.5mm
Cooling:	Regulated Two Stage TEC
Delta T	35°C -40°C below ambient
Cooling Power consumption	12V at 5A Max
Supported OS	Windows, Linux & Mac OSX
Working Temperature	-5°C~45°C
Storage Temperature	-10°C~60°C
Working Relative Humidity	20%~80%
Storage Relative Humidity	20%~95%

4. QE Graph & Read Noise

QE and Read noise are the most important parts to measure the performance of a camera. Higher QE and Lower read noise are needed to improve the SNR of an image.

Relative QE Curve for ASI294MC

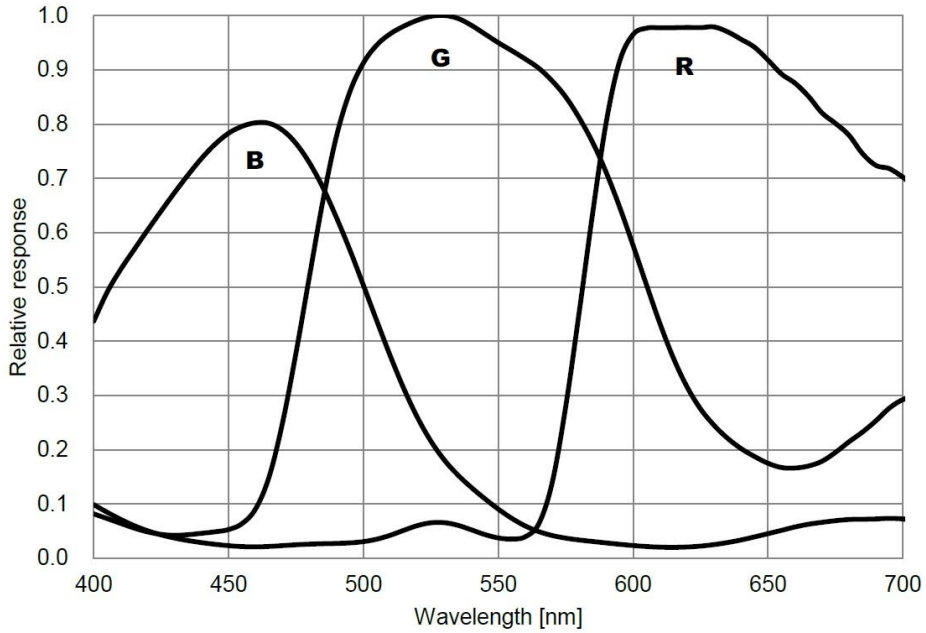

Relative QE Curve for ASI294MM

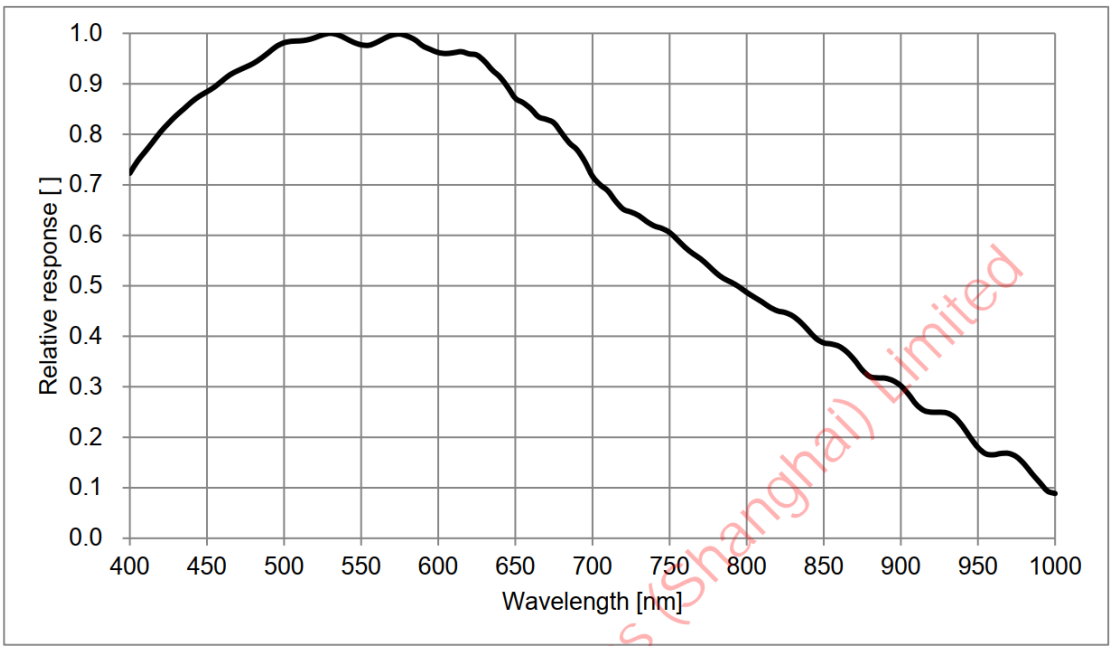

Read noise includes pixel diode noise, circuit noise and ADC quantization error noise, and the

lower the better.

As you can see, the Readout Noise of the ASI294 camera is extremely low when compared with traditional CCD cameras. In addition, it is with Built-in HCG mode, which can effectively reduce read noise at high gain and keep the same wide dynamic range for this camera as at low gain. When the gain is 120, the HCG mode will be automatically turned on. Additionally, the read noise is as low as 1.2e while the dynamic range can still be close to 14bit.

Depending on your target, you can set the gain lower for higher dynamic range (longer exposure) or set the gain higher for lower noise (such as short exposure or lucky imaging).

ASI294MC

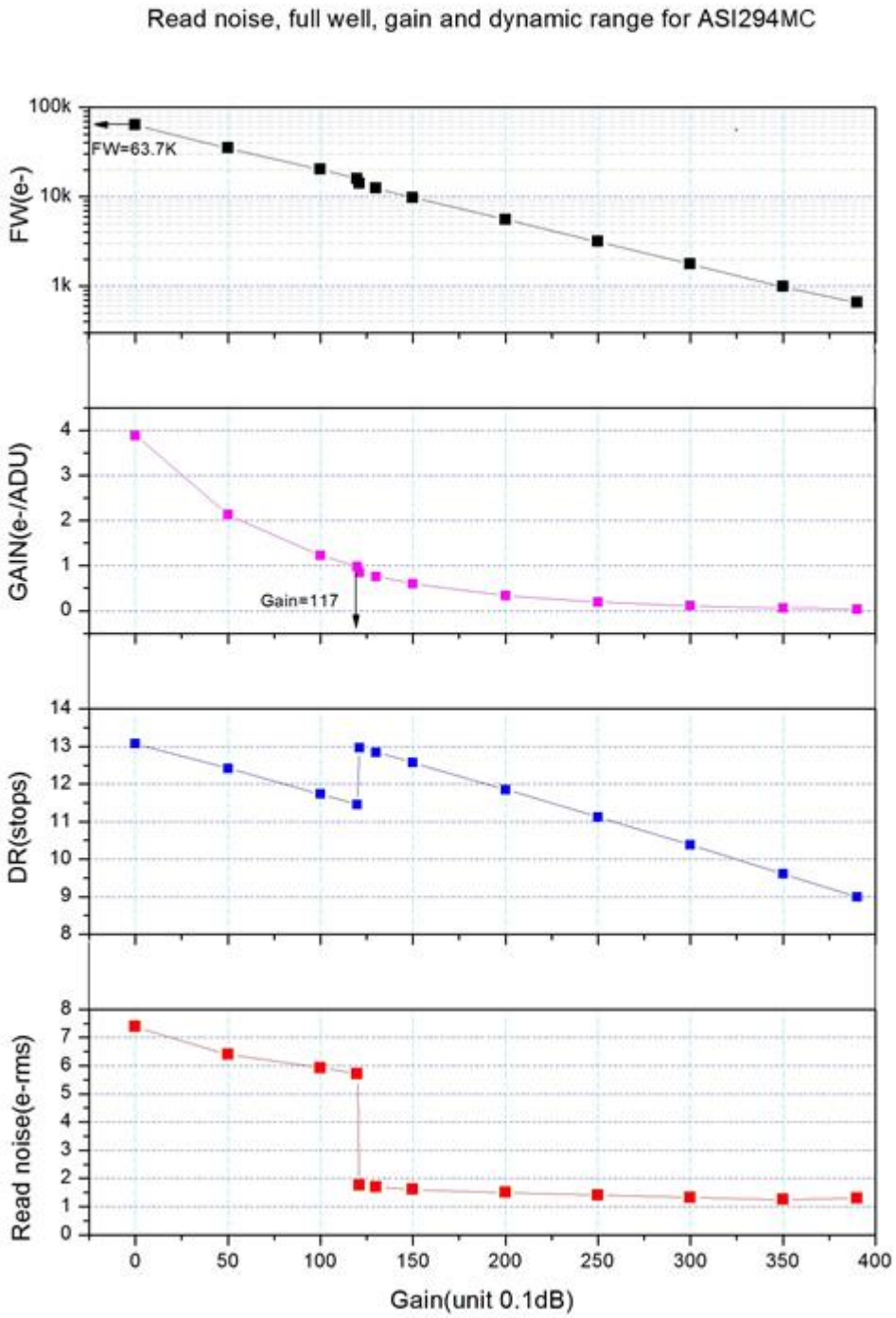
Read noise, full well, gain and dynamic range for ASI294MC
FW(e-)
100k
10k
1k
FW=63.7K
GAIN(e-/ADU)
Gain=117
DR(stops)
Read noise(e-rms)
Gain(unit 0.1dB)

ASI294MM

Read noise, full well, gain and dynamic range for ASI294MM

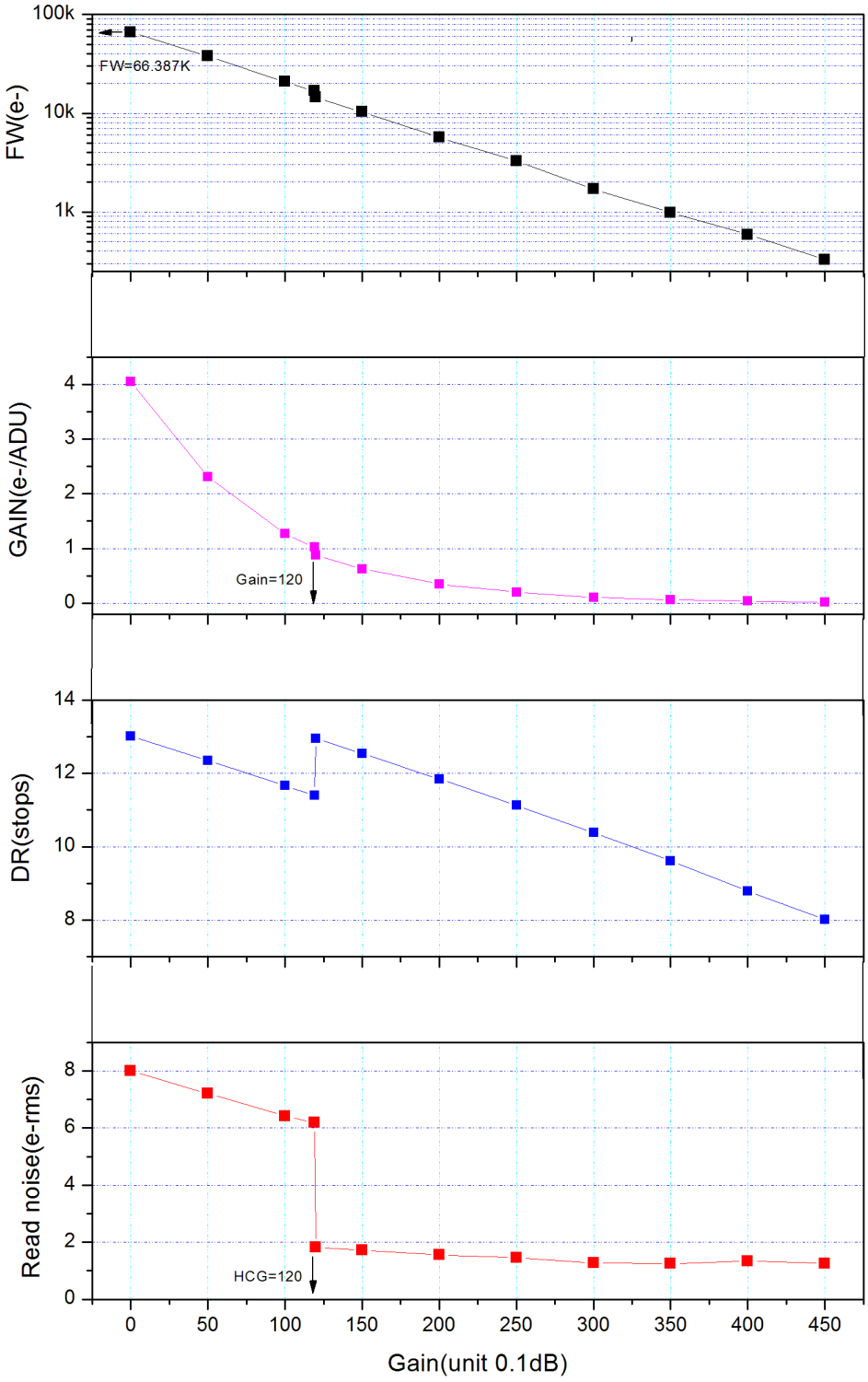

5. Getting to know your camera

5.1 External View

Left: ASI294MM/MC
Right: ASI294MM/MC Pro

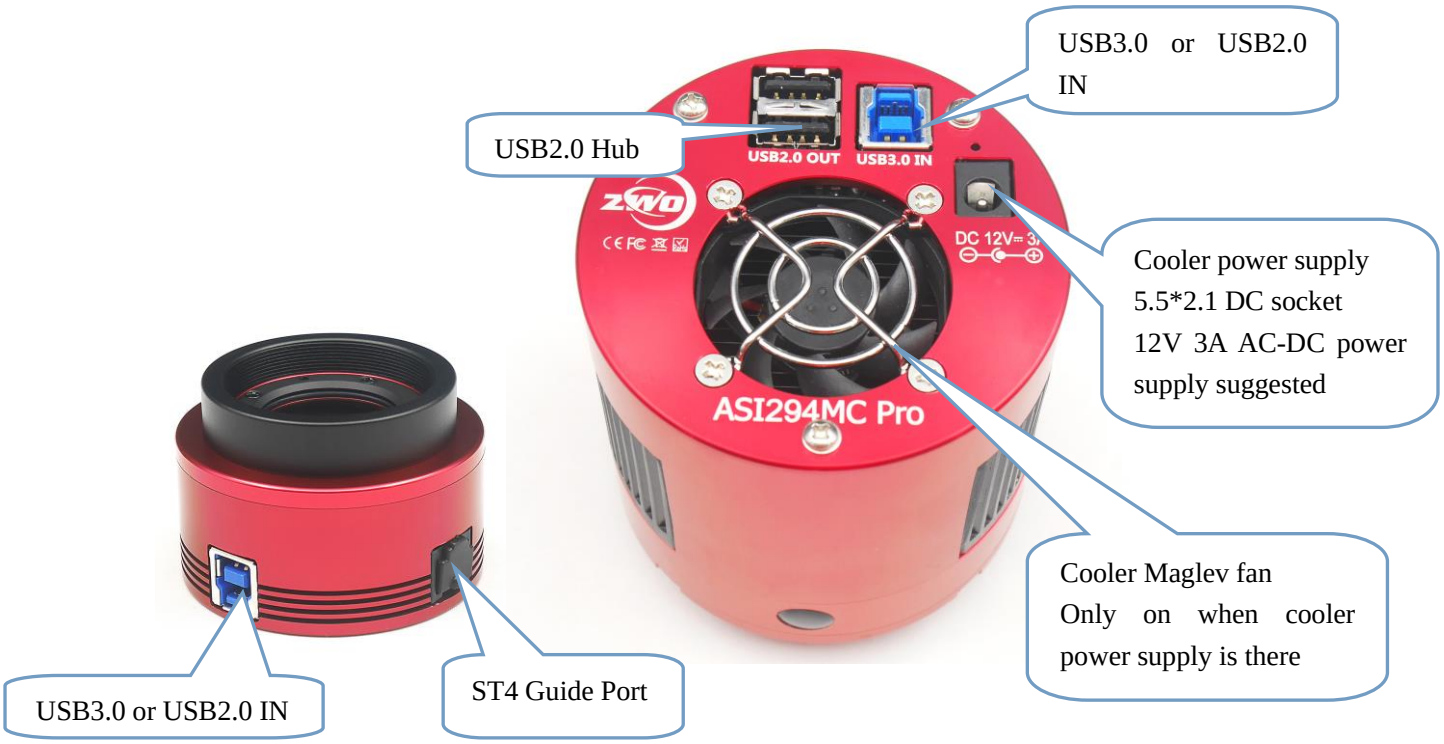

*The first generation of cooled camera we used a ST4 port instead of USB2.0 hub

You can order the holder ring from us or our dealer to mount the cooled camera to tripod.
There is 1/4″ screw under the holder

5.2 Power consumption

ASI294 camera is with low power consumption, max at 1.85W (power supplied by USB).
Recommended power supply for cooling: 12V@5A DC adapter (5.5×2.1mm, center pole positive).
Also suitable: lithium battery with 11-15V.
Here is the ASI294 cooling efficiency graph.

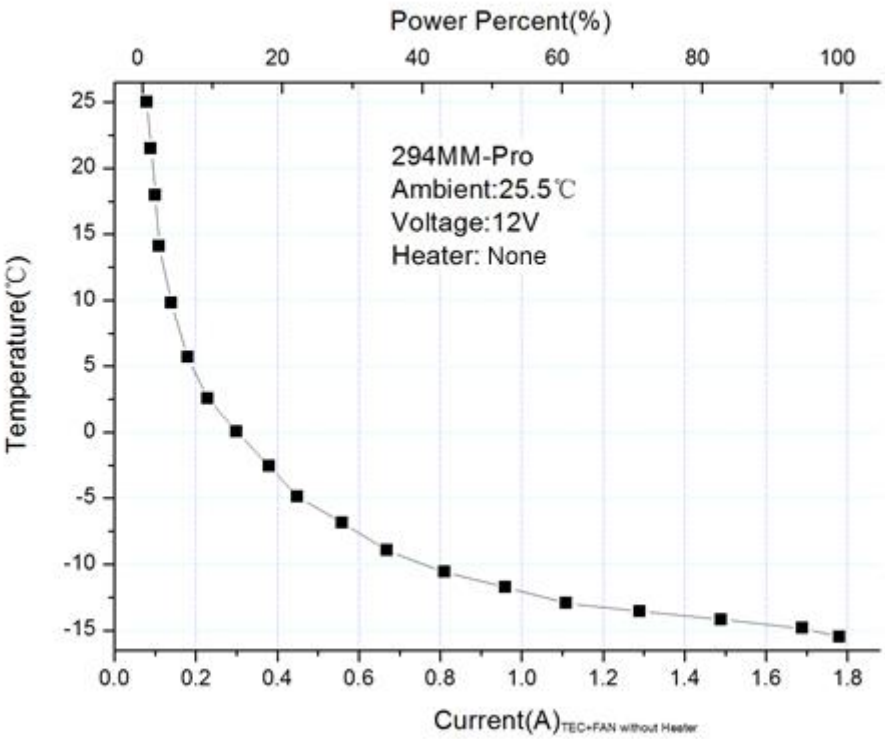

5.3 DDR Buffer

ASI294 Pro camera includes a 256MB(2Gb) DDR3 memory buffer to help improve data transfer reliability. Additionally, the use of a memory buffer minimizes amp-glow, which is caused by the slow transfer speeds when the camera is used with a USB 2.0 port.

5.4 Cooling system

The ASI294 Pro camera have a robust, regulated cooling system, which means that the camera sensor can be kept at the desired temperature throughout your imaging session. The super low readout noise, combined with efficient cooling and adjustable gain setting, allows you to do short or lucky DSO imaging unlike the traditional CCD cameras which need very long exposures for each frame. However, keep in mind that cooling won't help with very short exposures such as less than 100ms. The lowest temperature that can be set is -35℃~-40℃ below ambient.
Here is a dark current test result of ASI294 Pro sensor at various temperatures.

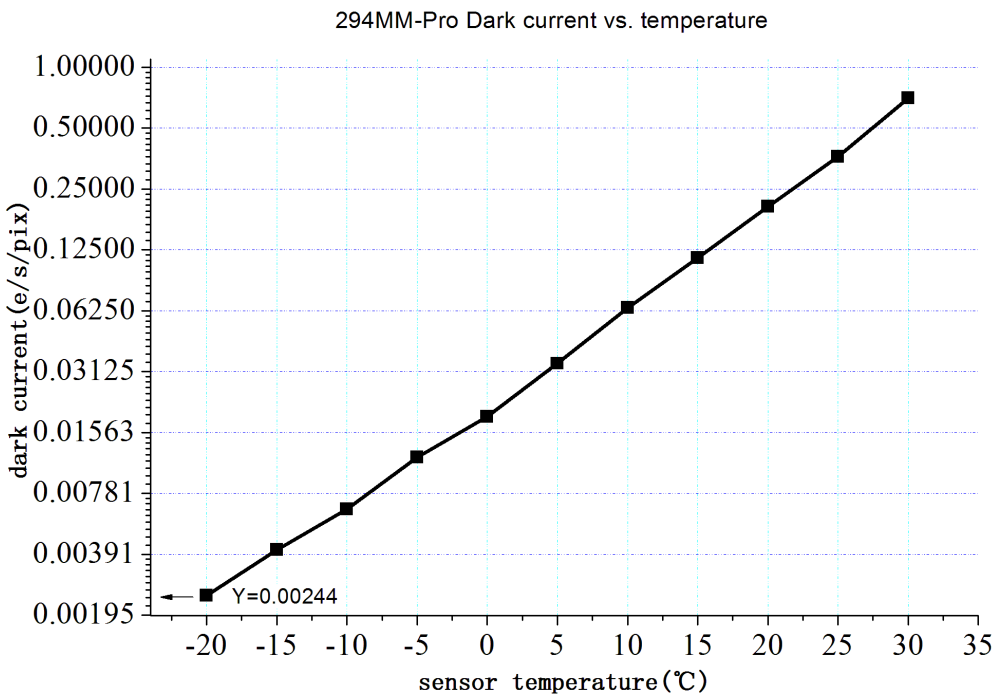

5.5 Back focus distance

When 11mm T2 Extender is removed from camera, back focus length is reduced to 6.5mm.

5.6 Protect Window

There is a protective window in front of the ASI294 camera sensor, with 32mm diameter and 2mm thickness.
ASI294 uses the AR coated filter.

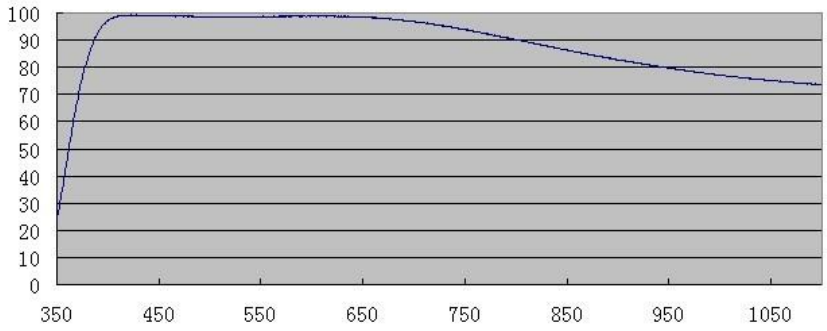

5.7 Analog to Digital Converter (ADC)

The ASI294 camera can records in 14bit ADC and 12bit ADC. You can image at a faster fps rate if you choose to use 12bit ADC (high speed mode). This camera also supports ROI (region of interest) shooting, and smaller ROI range support faster fps.
Here is the maximum speed of ASI294 running at 12bit ADC or 14bit ADC.

Resolution	USB3.0	
	12Bit ADC	14Bit ADC
4144*2822	19fps	16.3fps
4096*2160	24.7fps	21.1fps
3840*2160	24.7fps	21.1fps
1920*1080	47.9fps	41fps
1280*720	69.8fps	59.7fps
640*480	100.5fps	86fps
320*240	179.3fps	153.4fps

5.8 Binning

The ASI294 camera supports software bin2, bin3 and bin4 modes.

6.How to use your camera

There are many adapters available for this camera for connecting to your scope, DSLR lens and other astronomical equipment. Some are included with the camera and others you can order from our site:
https://astronomy-imaging-camera.com/product-category/accessories

Uncooled camera connecting drawing:

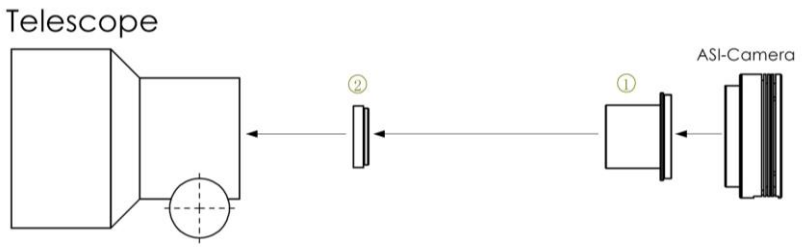

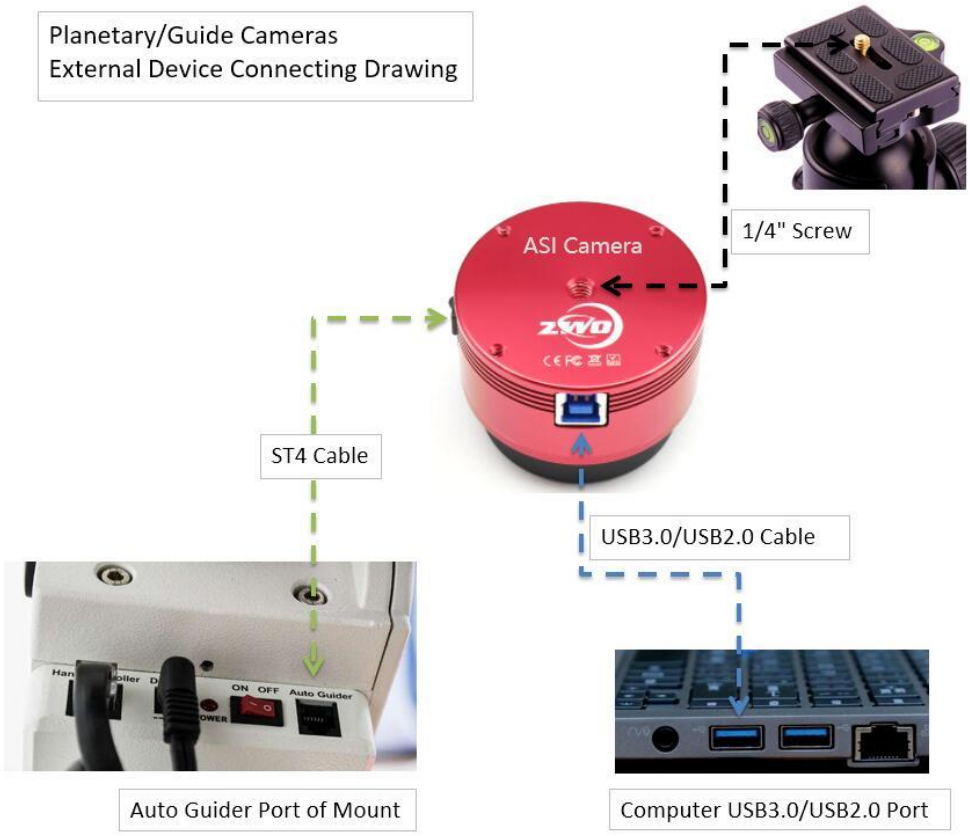

1. 1.25” T-Mount
2. 1.25”filter(optional)

Cooled color camera connecting drawing:

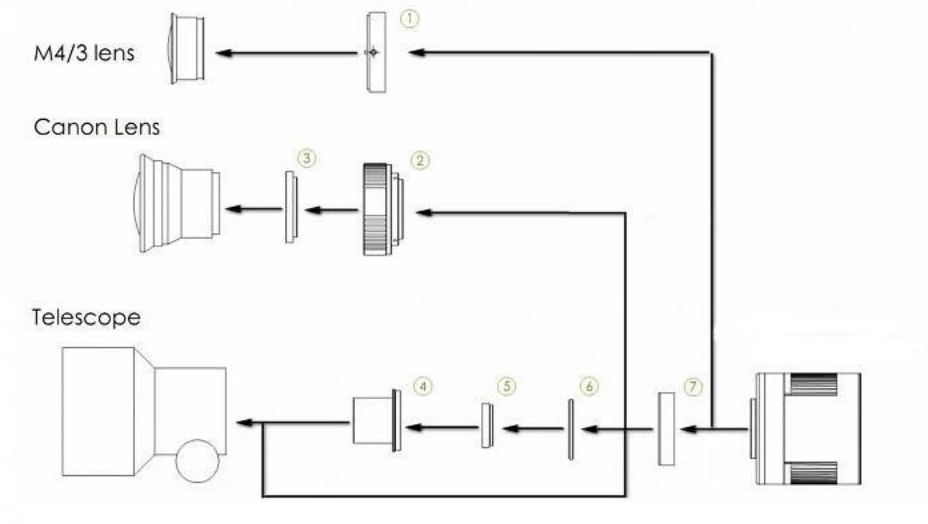

1. M43-T2 adapter
2. EOS-T2 adapter
3. 2”Filter (optional)
4. 1.25” T-Mount
5. 1.25” Filter (optional)
6. M42-1.25” Filter (optional)
7. T2 extender 11mm

Cooled Mono camera connecting drawing:

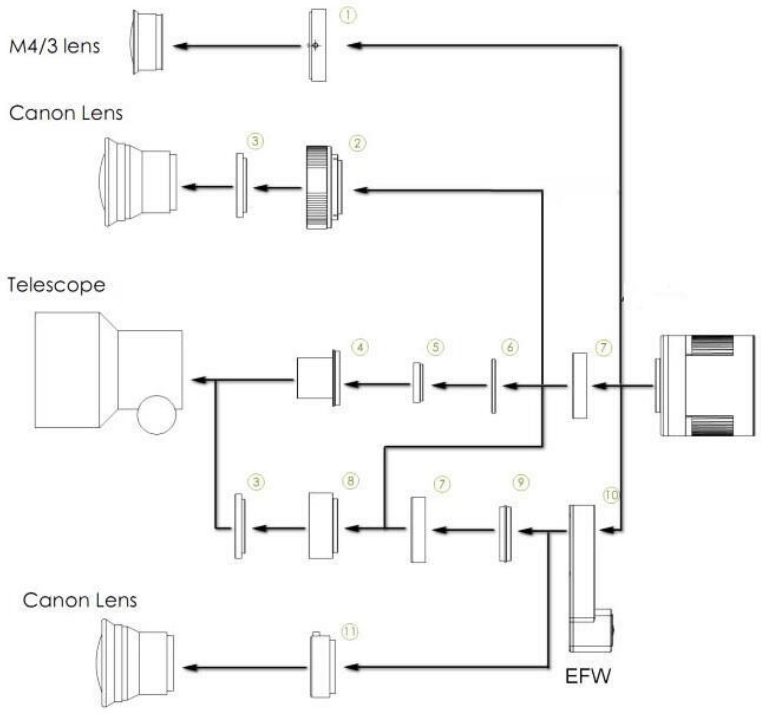

1. M43-T2 adapter
2. EOS-T2 adapter
3. 2”Filter (optional)
4. 1.25” T-Mount
5. 1.25” Filter (optional)
6. M42-1.25” Filter (optional)
7. T2 extender 11mm
8. M42-M48 extender 16.5mm
9. T2-T2 adapter
10. EFW mini
11. EOS adapter for EFW

For the detailed connecting drawing of cooled cameras, please read this tutorial:
https://astronomy-imaging-camera.com/tutorials/best-back-focus-length-solutions-55mm.html

7. Cleaning

The camera comes with an AR protect window, which can protect the sensor from dust and humidity. Should you need to clean the sensor, it's better to do so during the daytime. To see the dust, you just need to setup your telescope and point it to a bright place. One barlow lens is required to see these dusts clear. Then attach the camera and adjust the exposure to make sure not over exposed. You can see an image like below if it's dirty.

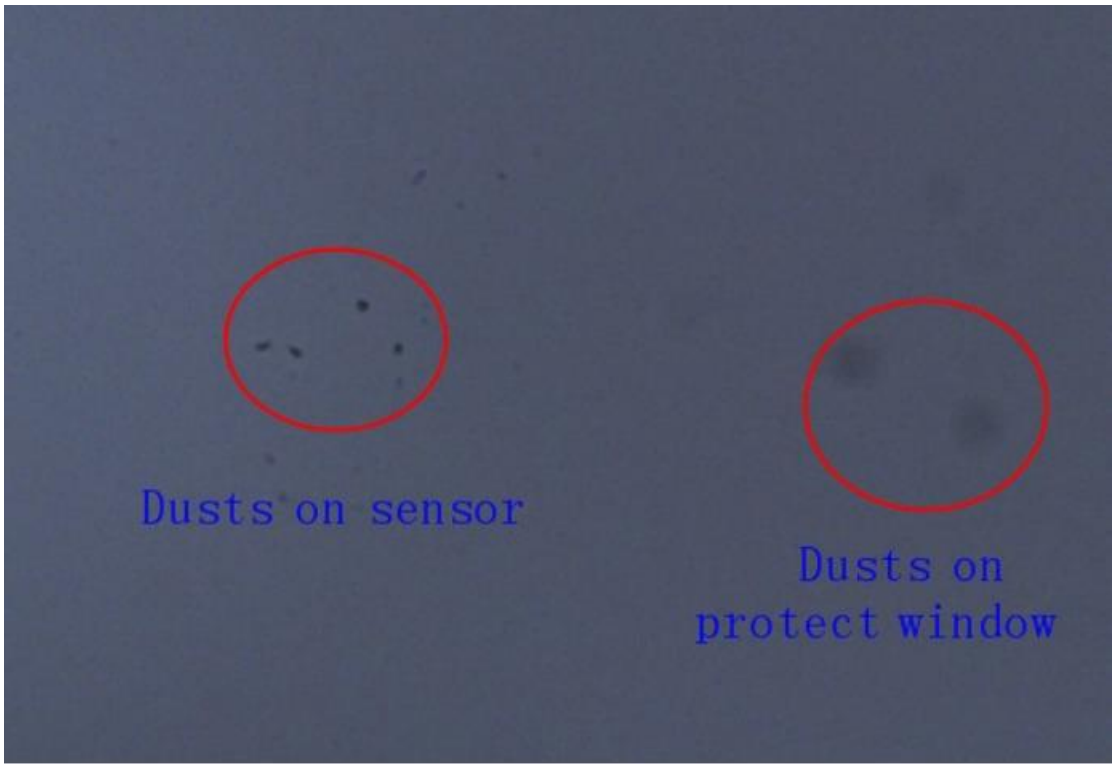

The big dim spot on the image (at right) are the shadows of dust on the protective window.
The very small but very dark spot in the image (at left) are the shadows of the dusts on the sensor.
The suggested way to clean dust on protective window is try to blow them away with a manual air pump. To clean the dust on the sensor you will need to open the camera chamber.
We have a very detailed instruction on our website:
https://astronomy-imaging-camera.com/manuals/

Quickguide

- ZWO ASI Camera Quick Guide
- ZWO ASI Cooled Camera Quick Guide
- How to clean ASI camera and redry the desiccant

8. Mechanical drawing

ASI294MM/MC

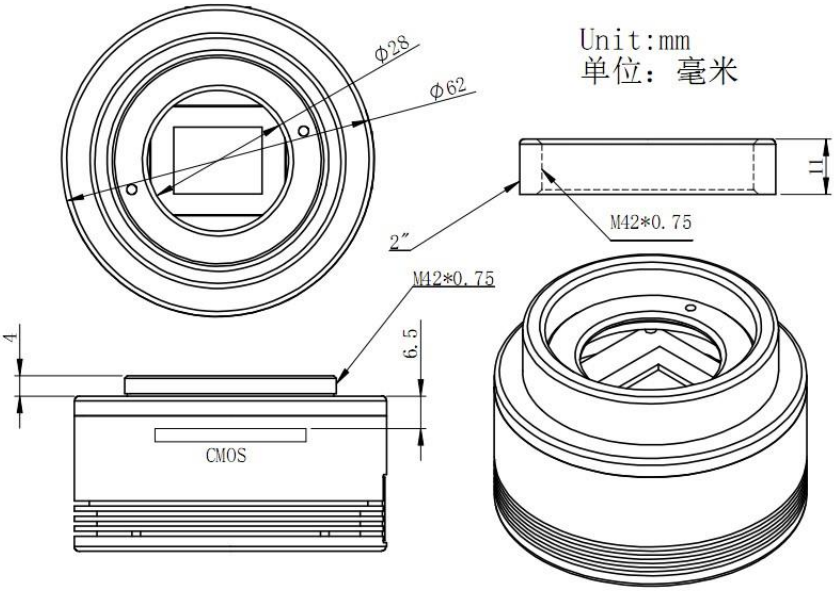

ASI294MM/MC Pro

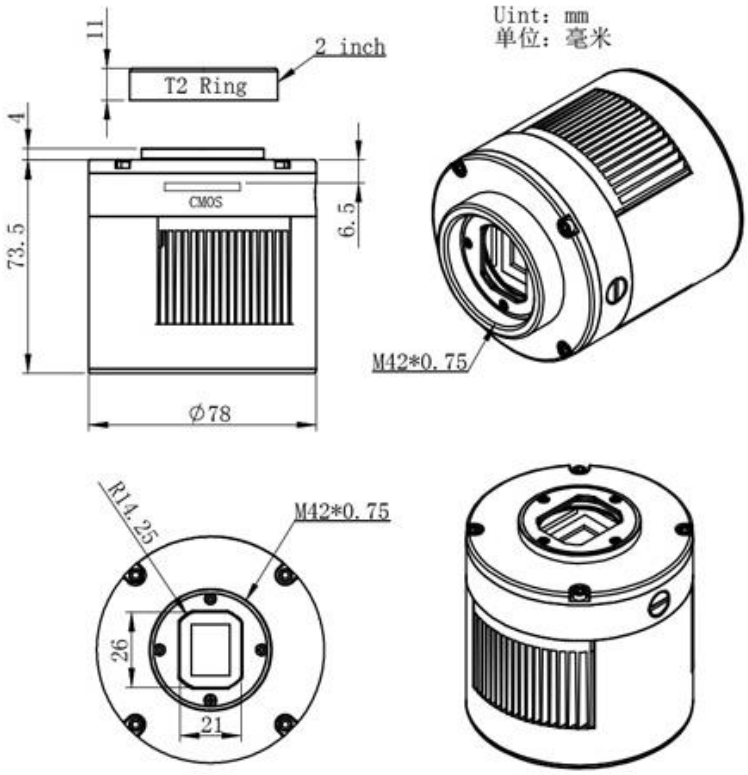

9. Servicing

For software upgrades please refer to “Support-manual and software” on our official website.
https://astronomy-imaging-camera.com/
Repairs and servicing are available at the support page of the ZWO site:
https://support.astronomy-imaging-camera.com/
For customers who bought the camera from your local dealer, dealer is responsible for the customer service.

10.Warranty

We provide 2-year warranty for our products. We offer repair service or replacement for free if the camera doesn’t work within warranty period.
After the warranty period, we continue to provide repair support and service on a charged basis.
This warranty does not apply to damage that occurred as a result of abuse or misuse, or caused by a fall or any other transportation failures after purchase.
Customer must pay for shipping when shipping the camera back for repair or replacement.